SFC300-500A1

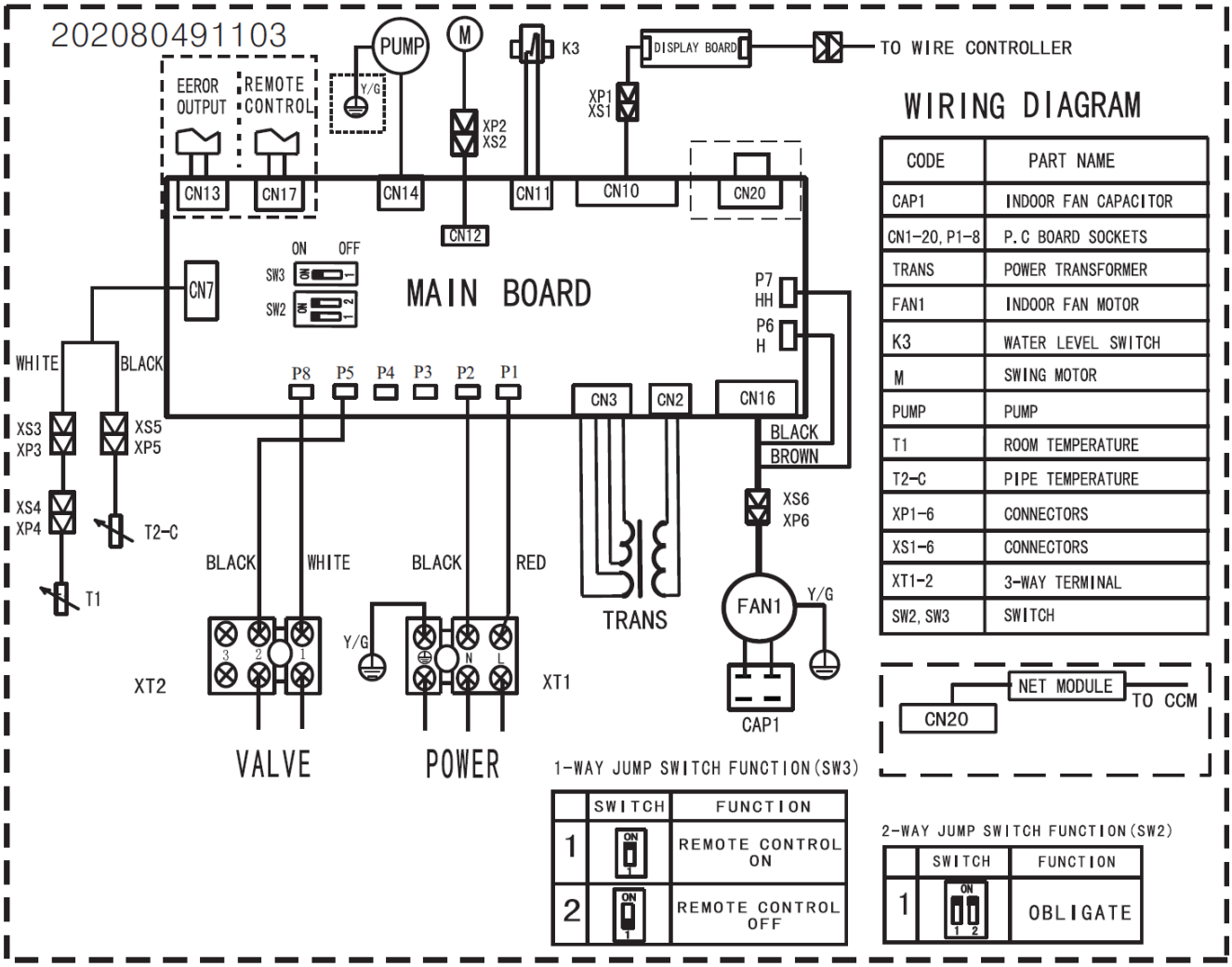

SFC600-1500A1

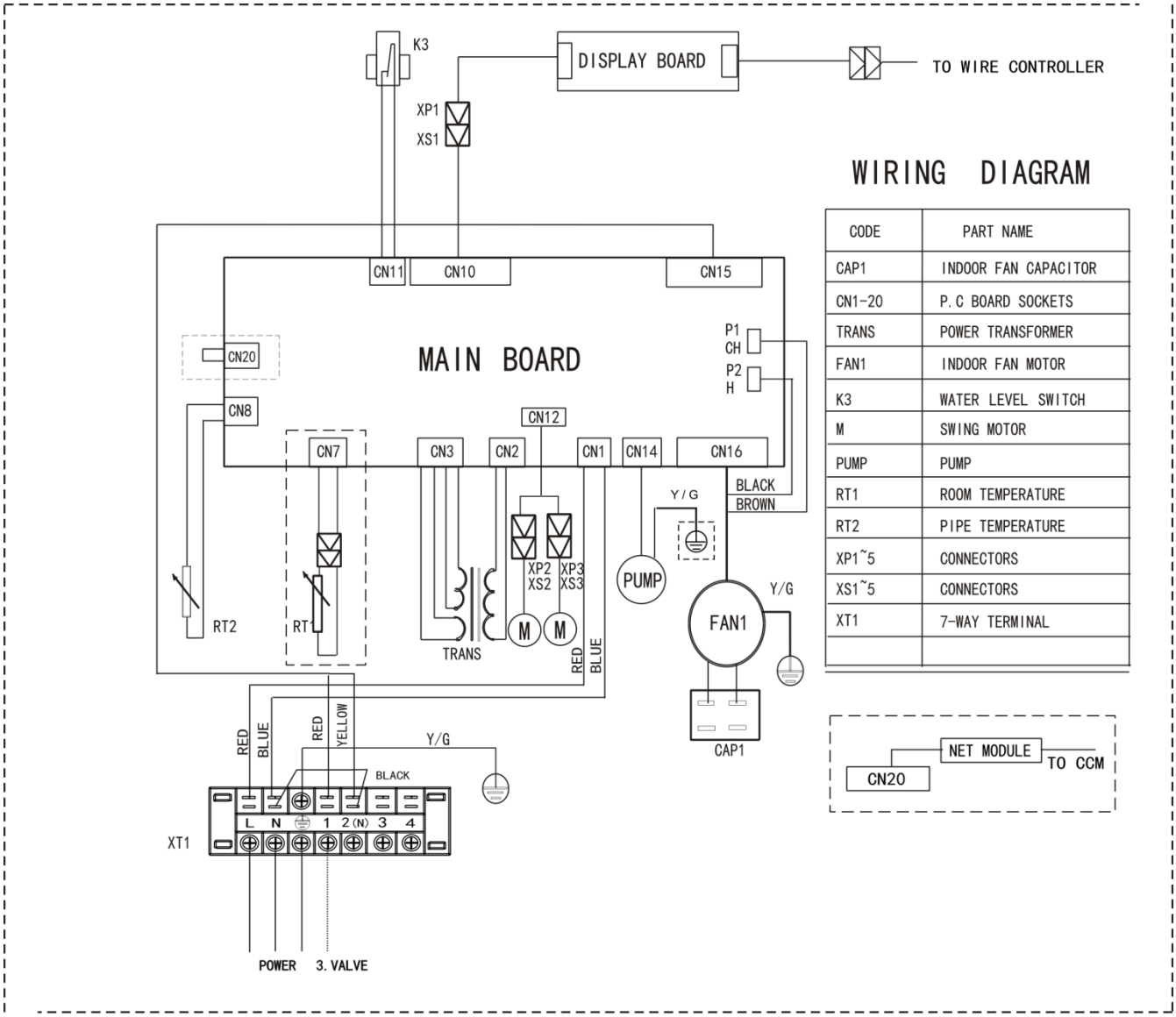

CODE	PART NAME
CAP1	INDOOR FAN CAPACITOR
CN1-20	P.C BOARD SOCKETS
TRANS	POWER TRANSFORMER
FAN1	INDOOR FAN MOTOR
K3	WATER LEVEL SWITCH
M	SWING MOTOR
PUMP	PUMP
RT1	ROOM TEMPERATURE
RT2	PIPE TEMPERATURE
XP1~5	CONNECTORS
XS1~5	CONNECTORS
XT1	7-WAY TERMINAL